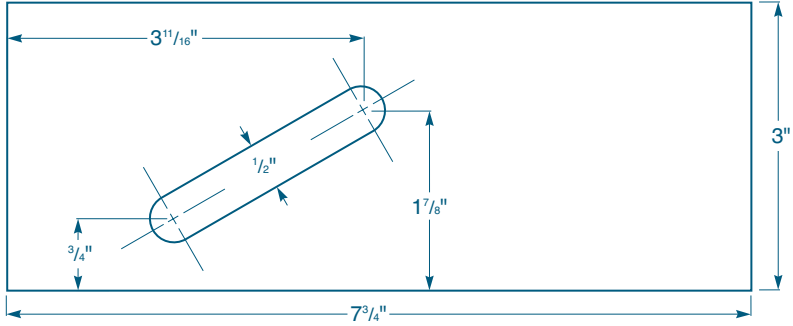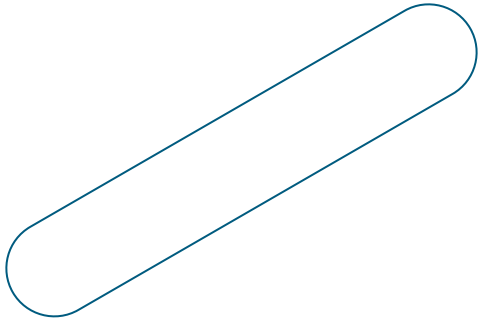
3 11/16"
3"
1/2"
1 7/8"
3/4"
7 3/4"